# M08A(466Y3)

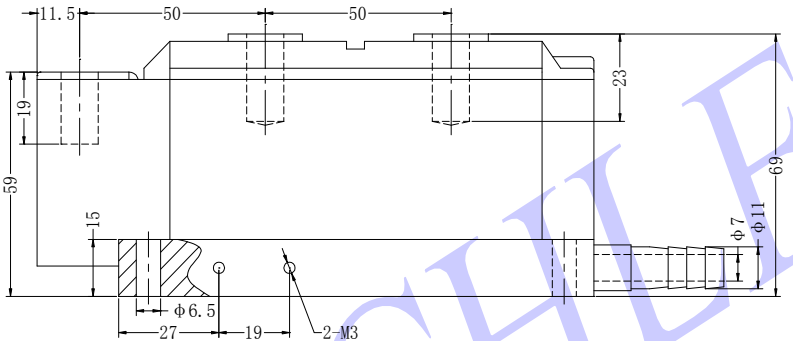


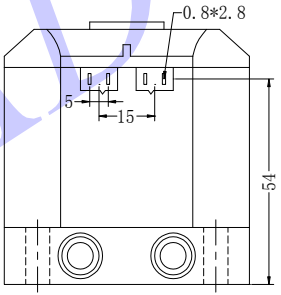


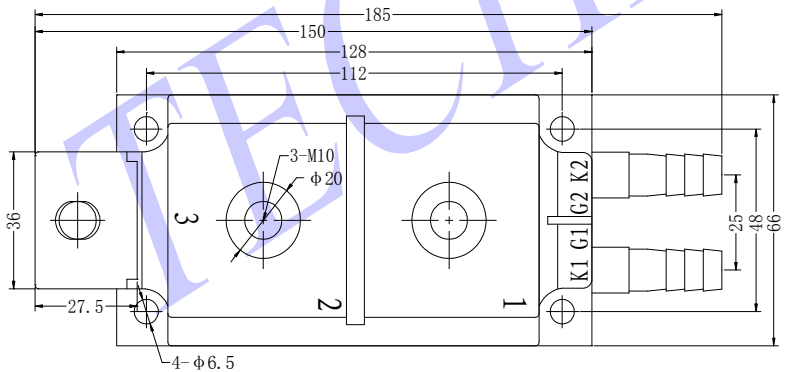


TECHLEAD