M31A

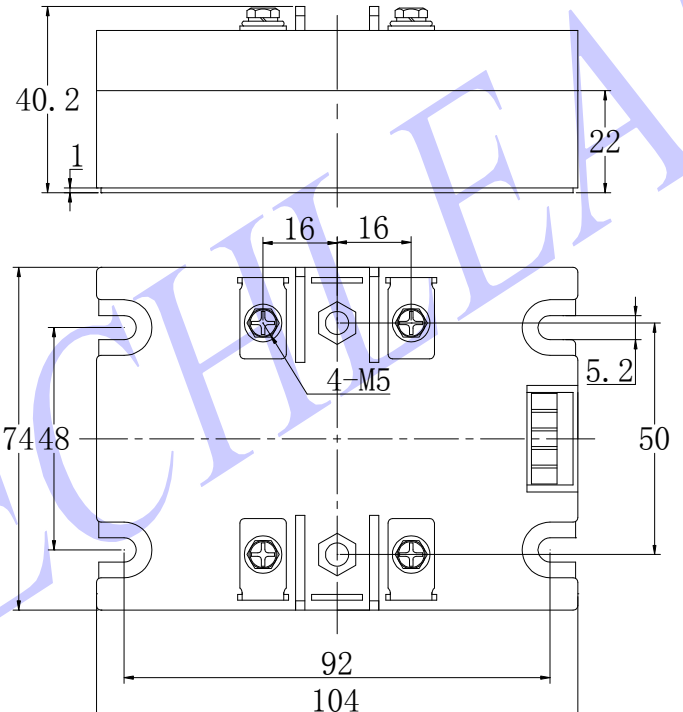

TECHLEAD